Honeywell

PC41E-D/PC42E-D

Desktop Printer

Quick Start Guide

PC41E42E-D-EN-QS-2 Rev A
09/25

Out of the Box

Make sure the shipping box contains these items:

- Printer
- USB cable
- Power adapter
- Power cord (see note below)
- Product documentation

Note: *Power cord inclusion is SKU dependent and may need to be ordered separately. Contact your local sales representative for assistance.*

If you have ordered accessories for your printer, verify that they are included in the order. Be sure to keep the original packaging in case you need to return the printer.

Printer Features

Front

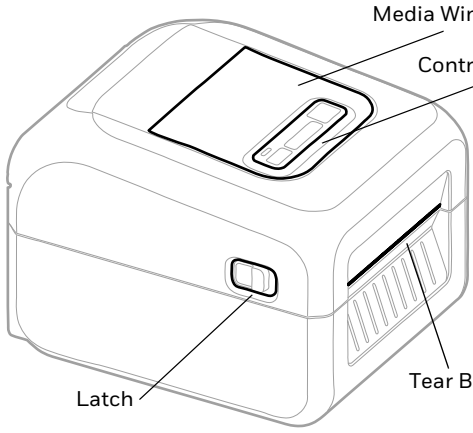

Back

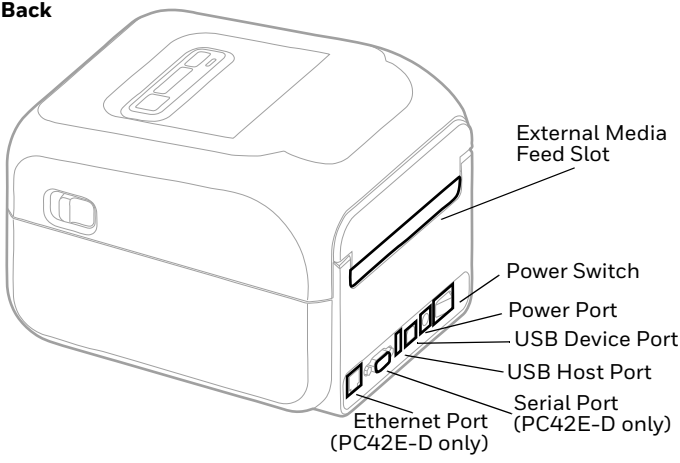

Internal

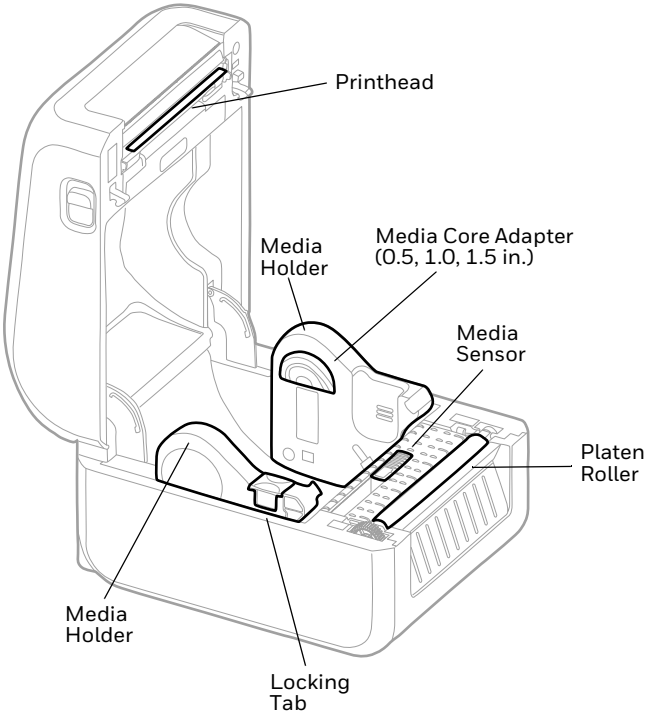
Printhead
Media Holder
Media Core Adapter (0.5, 1.0, 1.5 in.)
Media Sensor
Platen Roller
Media Holder
Locking Tab

Set up Printer

Load Media

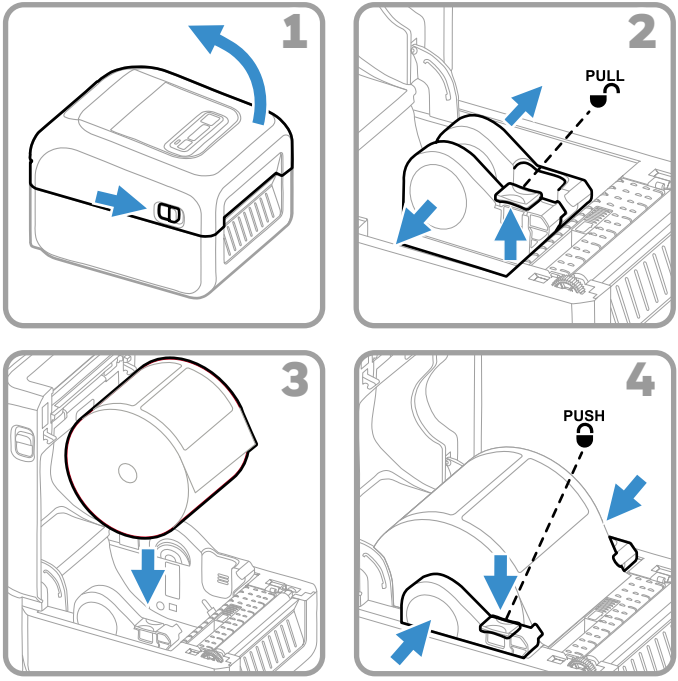

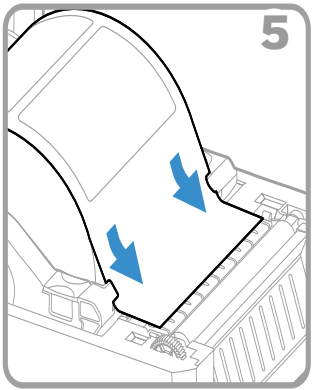
5

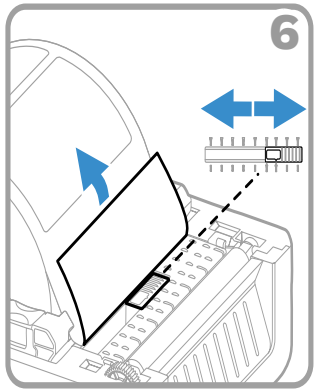
6

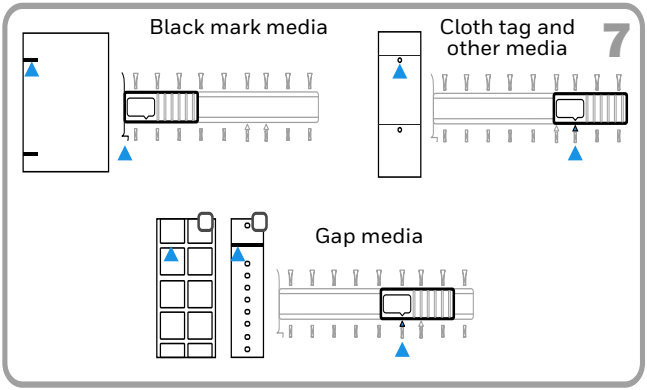
Black mark media
Cloth tag and other media
7
Gap media

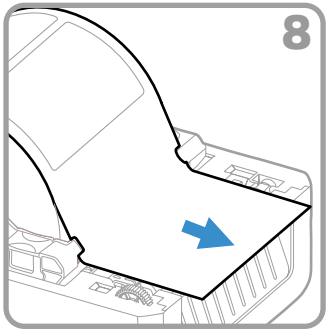

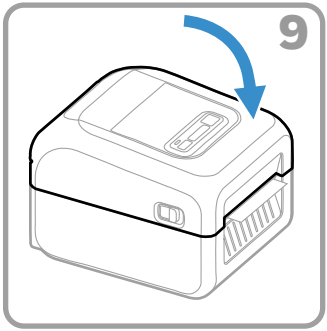

Power on Printer

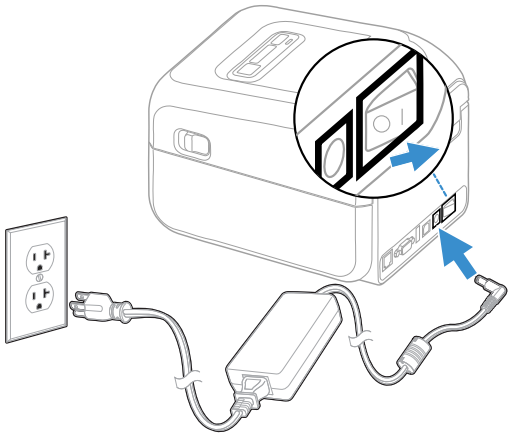

Note: *Make sure the power switch of the printer is turned off before connecting the power cord.*

Control Panel

PC41E-D

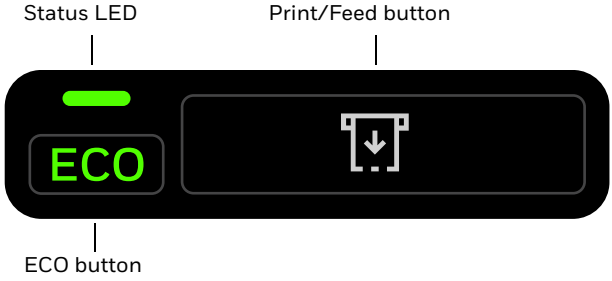

PC42E-D

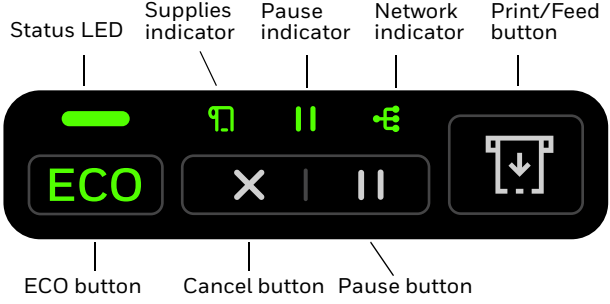

Status LED

The **Status** LED turns green, amber, or red to indicate the current status of the printer.

LED State	Description
Off	Power is turned off.
Green	The printer is idle and waiting for the next print job.
Green (blinking) (PC41E-D only)	The printer is starting up. Printing is paused. Press the **Print/Feed** button to resume printing or press and hold the **Print/Feed** button for three seconds to cancel the print job.
Green (blinking from start up)	The printer is experiencing a memory error. You need to upgrade the firmware. For more information, see the PC41E-D/PC42E-D User Guide.
Green (blinking with Green **Network** indicator) (PC42E-D only)	Data is being transferred by Wi-Fi or Ethernet.
Green (blinking fast)	The printer is communicating. The simulator (ZSim and ESim) is starting up.
Green (blinking slow)	In peel off mode, a printed label is available in the output slot. The printer will not print another label until the label in the output slot is removed.

LED State	Description
Amber (PC41E-D only)	The printhead is too hot. Wait for the printhead to cool down to an acceptable temperature before it can resume printing.
Amber (blinking)	The printer is upgrading its firmware from an inserted USB flash drive. Remove the USB flash drive after the LED turns solid green.
Amber (blinking slow)	The print job includes a font that is not installed or includes a location that is outside the available print area.
Red (blinking)	The printer is in Error mode. The printer may be out of media, have the printhead lifted, have a label obstructing the printing path, or you may not have performed a testfeed (hold **Print/Feed** button until several labels print). After you have fixed the error, printing will resume automatically.
Red (blinking with blinking red **Pause** indicator) (PC42E-D only)	Printhead over temperature. Requires cooling the printhead and printer restart.
Red and Green (blinking alternately)	The printer is experiencing a hardware issue. Return the printer to Honeywell for service. For more information, see the PC41E-D/ PC42E-D User Guide.

Print/Feed Button

Use the **Print/Feed** button to feed and calibrate media. For the PC41E-D, you can also use the button to pause and cancel print jobs.

Print/Feed Button Action	Description
Press and hold the **Print/Feed** button (while the printer is starting up)	The printer calibrates the media, prints a configuration label, and then lets you select the printer command language. Press the **Print/Feed** button when the printer command language you want to use prints out.
Press and hold the **Print/Feed** button for two seconds and then release (when the printer is idle)	The printer prints out several labels to calibrate the media sensor (testfeed).
Press and hold the **Print/Feed** button for six seconds (when the printer is idle)	The printer prints out several labels (testfeed) and then prints the configuration label.
Press and release the **Print/Feed** button	If the printer is idle, the printer advances media to the beginning of the next label. PC41E-D only: If a print job is active, printing pauses. If the printer is paused, printing resumes.

Print/Feed Button Action	Description
Press and hold the **Print/Feed** button for three seconds (PC41E-D only)	If the printer is paused, the current print job is canceled, and any remaining print jobs continue printing.

ECO Button

Use the **ECO** button to turn ECO mode on and off.

ECO Button State	Description
Green (on)	ECO mode is on. The fast media calibration feature is active and the printer media calibration process will use a minimal length of labels. Use ECO mode to conserve media.
Blank (off)	ECO mode is off. The slow media calibration feature is active and the printer media calibration process will use the length of multiple labels. Use slow calibration if the printer has trouble identifying gaps or marks in media.

Pause Indicator

PC42E-D only. Use the **Pause** indicator to monitor paused print jobs and printhead status.

Pause Indicator State	Description
Amber	The printer is paused. Print, label feed (advance), and other label processes are suspended until the pause state is removed by pressing the **Pause** button.
Red (blinking with blinking Red **Status** LED)	Printhead over temperature. Requires cooling the printhead and printer restart.

Pause Button

PC42E-D only. Use the **Pause** button to pause print jobs.

Pause Button Action	Description
Press the **Pause** button during a print job	Pauses the printer. The printer completes printing the current label before it pauses.
Press the **Pause** button while the printer is paused	The printer returns to normal operation. If printing a multi-label (form/format) job or another print job is in the print queue, the printer resumes printing.

Cancel Button

PC42E-D only. Use the **Cancel** button to cancel print jobs.

Note: *The **Cancel** button is available only when the printer is in pause state.*

Cancel Button Action	Description
Press the **Cancel** button	The printer cancels the current job in the print queue.
Press and hold the **Cancel** button for two seconds	The printer cancels all jobs in the print queue.

Network Indicator

PC42E-D only. Use the **Network** indicator to monitor the status of Wi-Fi (WLAN) and Ethernet (LAN) connectivity.

Network Indicator State	Description
Green	10/100 Ethernet (LAN) connection detected or Wi-Fi (WLAN) has a strong signal and is connected.
Green (blinking with blinking Green **Status** LED)	Data is being transferred by Wi-Fi or Ethernet.
Green (blinking)	Wi-Fi (WLAN) is connected, but has a weak signal.

Network Indicator State	Description
Red	Ethernet (LAN) or Wi-Fi (WLAN) fault.

Supplies Indicator

PC42E-D only. Use the **Supplies** indicator to monitor the status of print media.

Supplies Indicator State	Description
Amber (blinking)	Media is low.
Red	Media is out.

Print a Test Label

You can print a test label when you first turn on the printer.

1. Make sure that the printer has media installed.
2. Connect the printer to power and turn on the printer.
3. Press and hold the **Print/Feed** button until the printer calibrates the media, prints a configuration label, and then lets you select the printer command language.

Support

To search our knowledge base for a solution or log into the Technical Support Portal and report a problem, go to honeywell.com/PSStechnicalsupport.

Documentation

Product documentation is available at automation.honeywell.com.

Limited Warranty

For warranty information, go to automation.honeywell.com and click **Support** > **Productivity Solutions > Warranties**.

Patents

For patent information, see www.hsmpats.com.

Trademarks

Other product names or marks mentioned in this document may be trademarks or registered trademarks of other companies and are property of their respective owners.

Disclaimer

Honeywell International Inc. (“HII”) reserves the right to make changes in specifications and other information contained in this document without prior notice, and the reader should in all cases consult HII to determine whether any such changes have been made. HII makes no representation or warranties regarding the information provided in this publication.

HII shall not be liable for technical or editorial errors or omissions contained herein; nor for incidental or consequential damages resulting from the furnishing, performance, or use of

this material. HII disclaims all responsibility for the selection and use of software and/or hardware to achieve intended results.

This document contains proprietary information that is protected by copyright. All rights are reserved. No part of this document may be photocopied, reproduced, or translated into another language without the prior written consent of HII.

Copyright ©2025 Honeywell Group of Companies.
All rights reserved.