Honeywell

RP2f/RP4f*

Mobile Printers

Quick Start Guide

*Models RP2B, RP2D, RP4B, RP4D
*For China, Thailand, and India models RP2fB, RP2fD, RP4fB, RP4fD

RP2f4f-EN-QS Rev C
07/23

Get Started

Before you attempt to use, charge or replace the battery in the device, carefully read all labels, markings and product documentation provided in the box or online at sps.honeywell.com. To learn more about Battery Maintenance for Portable Devices, go to honeywell.com/PSS-BatteryMaintenance.

Avant d'essayer d'utiliser, de charger ou de remplacer la batterie de l'appareil, lisez attentivement toutes les étiquettes, marquages et documentation du produit fournis dans la boîte ou en ligne à sps.honeywell.com.

Pour en savoir plus sur l'Entretien de Batteries pour Appareils Portables, consultez-le honeywell.com/PSS-BatteryMaintenance.

We recommend use of Honeywell Li-ion battery packs. Use of any non-Honeywell battery may result in damage not covered by the warranty.

Nous recommandons l'utilisation de batteries Li-ion de la marque Honeywell. L'utilisation d'une batterie d'un autre fabricant est susceptible de provoquer des dommages non couverts par la garantie.

Ensure all components are dry prior to placing the battery in the device. Mating wet components may cause damage not covered by the warranty.

Assurez-vous que tous les composants sont secs avant d'insérer la batterie dans l'appareil. L'insertion de composants humides risque de provoquer des dommages non couverts par la garantie.

1. Install the battery in the printer. Align the release tab with the same side as the charge contacts and lock the battery into position. The latch clicks into place when properly seated.

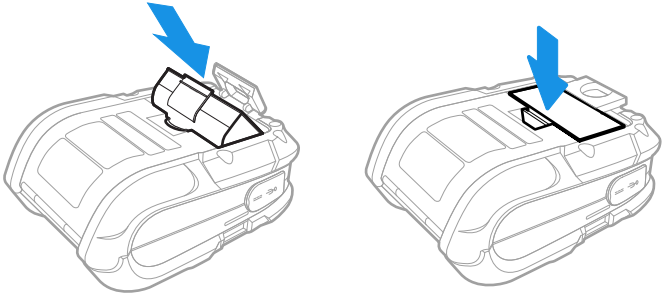

2. Connect the power supply to printer's power jack.

Note: Use only Honeywell approved power supply with an output rated at 12 VDC and 1.66A or greater. The operating temperature is 0 °C to 40 °C (32°F to104 °F).

3. Connect the AC power cord to the power supply and plug into an outlet.

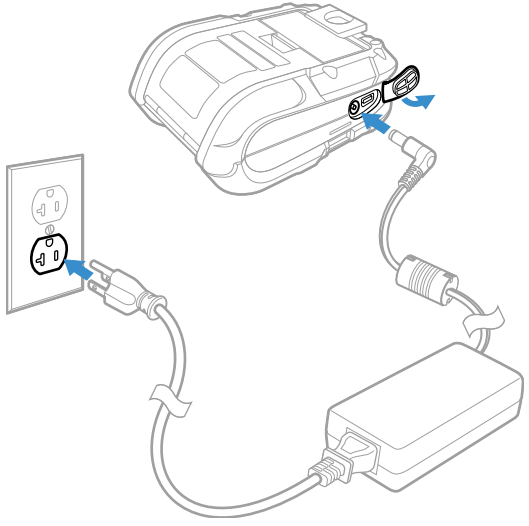

Note: Operating the printer while it is connected to the AC power supply can shorten the life of the battery and is not recommended.

Load Labels or Paper

Load labels or paper into the printer as follows:

1. Press down on the latch lock and lift up the printer's cover.

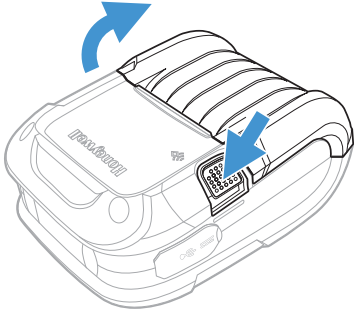

2. Slide and hold open the supply hubs.

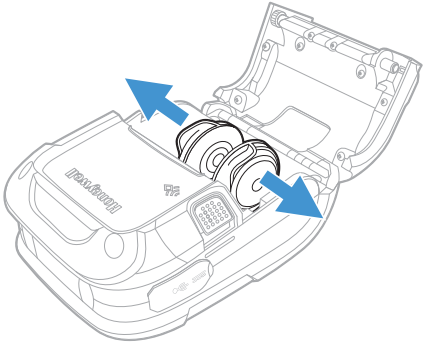

3. Orient the paper as shown and insert into the printer.

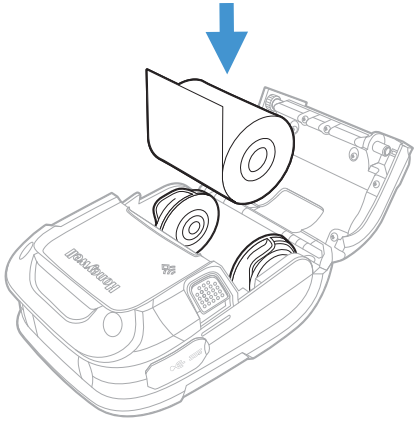

4. Allow the supply hubs to retract onto the paper roll, then press the cover down until it latches.

5. Press the media button 2 or 3 times to normalize tracking. Each button press advances the paper to the start of the next label.

Download Required Software

Download and install PrintSet 5 and Windows Printer Drivers software from the Technical Support Downloads Portal at honeywell.com/PSSsoftware-downloads.

PrintSet 5

1. In the Technical Support Downloads Portal, go to **Software > Printers > Printer Software and Drivers > Printer Configuration Tools > PrintSet 5 > Current** and click on **Download**.
2. When prompted, click on **Open Honeywell Software Downloader** and download the file to a local directory on your computer.
3. Extract the file and then double-click the extracted installation file. Follow the prompts to install the software.

Windows Printer Drivers

Note: *Make sure the printer is configured to Autosense or Fingerprint to install and use the Interdriver. You may expect some dummy prints when installing Interdriver under EZ-Print due to EZ-Print line mode.*

1. In the Technical Support Downloads Portal, go to **Software > Printers > Printer Software and Drivers > Printer Drivers > Windows Print Drivers > Current** and click on **Download**.
2. When prompted, click on **Open Honeywell Software Downloader** and download the file to a local directory on your computer.
3. Extract the file and then double-click the extracted installation file. Follow the prompts to install the driver installation files in a local directory on your computer.

4. Go to the local directory where you have extracted the file. Open the **Interdriver** folder and run **DriverWizard.exe**
5. Select **Install printer drivers** and proceed to next step.
6. Select **USB** as your connection type to the printer and click Next.
7. Make a connection to the printer using a USB cable. The wizard recognizes the printer and the printer information is displayed.
8. Select **Install a driver for a Plug and Play printer** and follow the prompts to begin the installation.
9. The wizard will request a restart to complete the installation.

Add the Printer to Your Host System

The default USB class is CDC Composite. On some systems (e.g., handheld devices), you will have to change this USB class in order to connect. See your User Guide for further information.

1. Connect the USB cable to the printer and to the USB port on the host system.
2. Power up your printer.
3. Your host computer should recognize the printer and begin adding the device driver. If the setup operation does not start, locate the **Devices and Printers** section in the Control Panel and select **Add a Printer**.
4. Select the appropriate RP printer model and follow the prompts to finish installation.

USB Virtual COM port

The virtual COM port for RP2f and RP4f printer is enabled by default. This allows you to connect the printer to your computer and serial port via a USB cable. Once you connect the USB cable on your computer, the USB serial device is automatically added in the Device Manager and a connection is established. You can select serial port as interface from PrintSet 5. To select:

1. Start PrintSet 5 and from the menu bar select **Files > Add Printer**.
2. Choose **Serial Port/Virtual COM** as the connection type.
3. Select the active port, for example, COM6: (Active) from the drop-down and click **Next**. The Printer is auto-connected and the printer description is displayed.

This is the easiest way to connect your printer to the computer without any need to install drivers.

Configure the Printer

1. Turn the printer on and connect it to the computer using the USB cable.
2. Start PrintSet 5. From the menu bar select **Files > Add Printer**. Follow the instructions to add the printer.
3. From the printer tree, select **Configuration** to view the printer settings.

See your User Guide for detailed information about changing the printer's settings using the Printer web page.

Front Panel

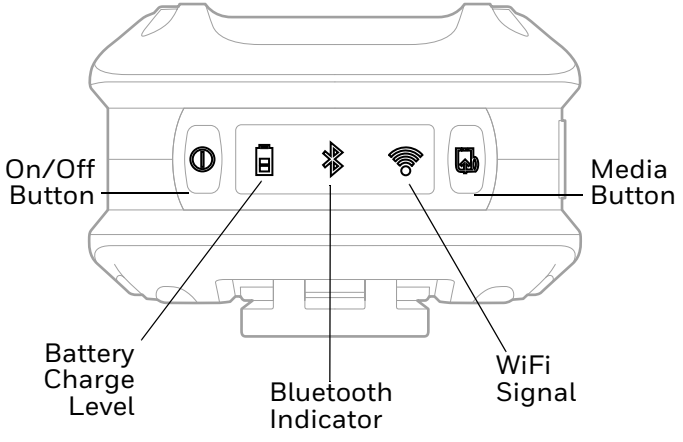

On/Off Button ⏻

Button Press	Result
Any length press (when printer is off)	Turn printer on.
Short press	Enter or exit sleep mode.
Long press for 3 seconds and release when the LED blinks in Red.	Turn printer off.

LED Display

Icon	Indication
 On/Off	Solid green = Printer is ready to print Blinking green = Printer is booting up Pulsing green = Printer is asleep Blinking red = Printer is shutting down
 Battery charge level	**When not charging:** Off = Battery is midway to fully charged Blinking orange = Battery charge is 10-30% Blinking red = Battery charge is 10% or less **When charging:** Solid green = Battery charge is 90% or more Pulsing green = Battery charge is 30% or more Pulsing orange = Battery charge is 30% or less Pulsing red = Battery charge is less than 10% **Battery low(critical)/No Battery:** Blinking red with 3 short beeps.
 Bluetooth indicator	Off = Bluetooth radio is off, disabled, not associated with a mobile device, or printer is off Solid blue = Bluetooth is enabled and connected Blinking blue = Data communication.
 WiFi signal	Off = WiFi radio is off, disabled, not associated with a mobile device or network, or printer is off White = WiFi is enabled and connected Blinking White = Data communication.
 Feed Button	Off = Printer is ready to print Blinking red = Media is not present or press and hold for test feed when media is present.

Media Button

The media button advances the paper through the printer. When there is no paper in the printer, the button blinks red.

Button Press	Result
Short press (when printer is idle)	Feeds label or paper length.
Short press (when the printer is printing/paused)	Pause/resume printing.
Press and hold for 2 seconds (when the printer is idle)	Media calibration.
Press and hold for 3 seconds (when the printer is paused)	Print job is canceled and any print jobs inside the printer are discarded. The printer is returned to the idle state.
Long press (> 10 seconds) until printing starts.	Print configuration label.

Audible Indicators

Beeps	Indication
1 beep	Power supply disconnected
	Printer Ready
	Printer in error mode
	Power supply connected
	Bluetooth pairing request received
3 short beeps	Battery charge is low
	No Battery.

Support

To search our knowledge base for a solution or to log in to the Technical Support portal and report a problem, go to honeywell.com/PSStechnicalsupport.

Limited Warranty

For warranty information, go to sps.honeywell.com and then select **Support > Productivity > Warranties**.

Patents

For patent information, see www.hsmpats.com.

Disclaimer

Honeywell International Inc. (“HII”) reserves the right to make changes in specifications and other information contained in this document without prior notice, and the reader should in all cases consult HII to determine whether any such changes have been made. HII makes no representation or warranties regarding the information provided in this publication.

HII shall not be liable for technical or editorial errors or omissions contained herein; nor for incidental or consequential damages resulting from the furnishing, performance, or use of this material. HII disclaims all responsibility for the selection and use of software and/or hardware to achieve intended results.

This document contains proprietary information that is protected by copyright. All rights are reserved. No part of this document may be photocopied, reproduced, or translated into another language without the prior written consent of HII.

Copyright © 2023 Honeywell Group of Companies. All rights reserved.